The Design and Application Research of Ultra-quiet Living Space Lab

XuGuang Wang [1]，Xiang Yan[1]，HongBing Su [2]，Xiaoyan Xue[1],GuangMing Zhang[3]

1. Building Physics Lab, School of Architecture, Tsinghua University, Beijing, China wxg@abcd.edu.cn

2. Beijing Municipal Institute of Labor Protection, Beijing, China;

3. Northwest Electric Power Design Institute of China Power Engineering Consulting (Group) Corporation, Xi'an, China ;

ABSTRACT:

An ultra-quiet living environment laboratory was created by us to study the human behavior, psychology, physical function in a ultra-quiet living space. A number of basic acoustic research and application research were carried out in the lab to explore the method of utilizing a quiet living environment to improve people's living quality and physical health. The detailed design of the ultra-quiet living environment laboratory, the creating process and the final result, and a brief description of the researches in the lab were introduced in this article. The ultra-quiet living environment lab can be utilized and play an important role for the basic scientific research and application research in human psychology, human behavior, medical treatment, health care and other fields.

Key words: The ultra-quiet living environment laboratory, acoustic environment, acoustic basic research, acoustic environment and human health

1. Introduction

Building a quieter and more livable living environment is a common and great goal for all the acoustics workers. To this end, we created a super-quiet living environment lab, which ask the lab has a very low background noise, and also requires a very good living and working environment, give people a very comfortable living environment and simple working conditions in order to better simulate the real life state.

A number of basic acoustic research and application research were carried out in the lab to explore the method of utilizing a quiet living environment to improve people's living quality and physical health.

The ultra-quiet lab was reformed by an idled lightweight roof rain noise research laboratory. [1]

2. The design and construction of Ultra-quiet living environment laboratory

2.1 Building sound insulation and vibration isolation

The idled lightweight roof rain noise research lab was located in the campus which surrounding with dormitory building and office building. And there were no strong noise and vibration source surrounding the lab. The location and surrounding of the idled lab was showed in Fig.1 and Fig.2.

Fig.1 The idled lightweight roof rain noise research lab

Fig.2 The location and surrounding of the idled lab

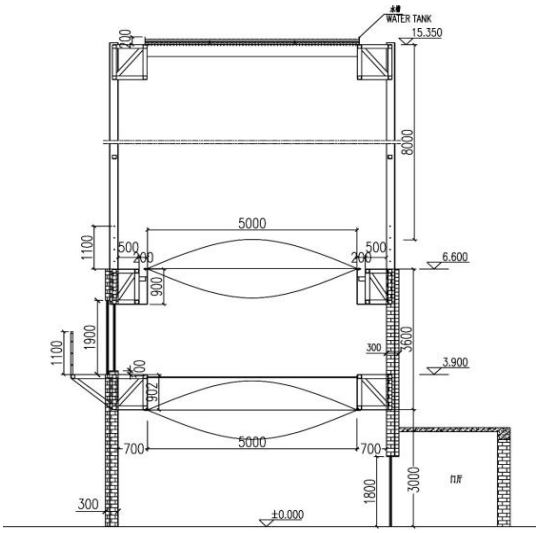

Fig.3 The Section drawing of the idled lab

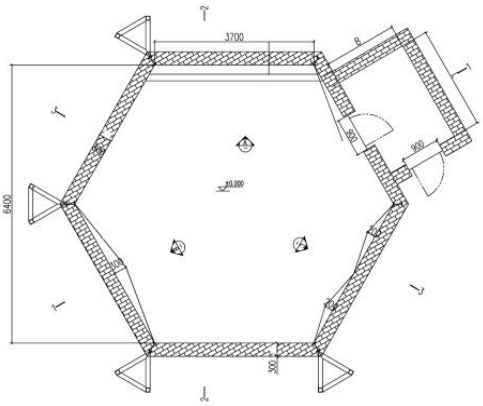

Fig.4 Floor plan of the idled lab

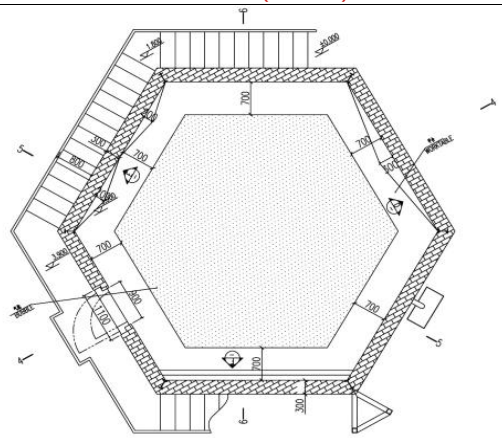

Fig.5 The Top-level plan of the idled lab

The original lab was a two-story building lab with reinforced concrete structures, whose constructions were showed as in the Fig.3 to Fig.5

The “room in the room" structure building was designed for the Ultra-quiet living environment laboratory and so a new room was built in the original building, which was showed in Fig.6. The new room was a building on the spring isolator to make it isolated from the surrounding environment, and which could ensure it for a ultra-quiet environment. The natural frequency of the spring isolator is about 4 Hz. The inner wall of the building was built by complex metal frame plasterboard wall and the roof of the inner building was concrete structure. And the integrated sound insulation of the building could be designed 70 dB and it could isolate most of the noise from outside. The “room in room” structure was the guarantee for the ultra-quiet lab in acoustic.

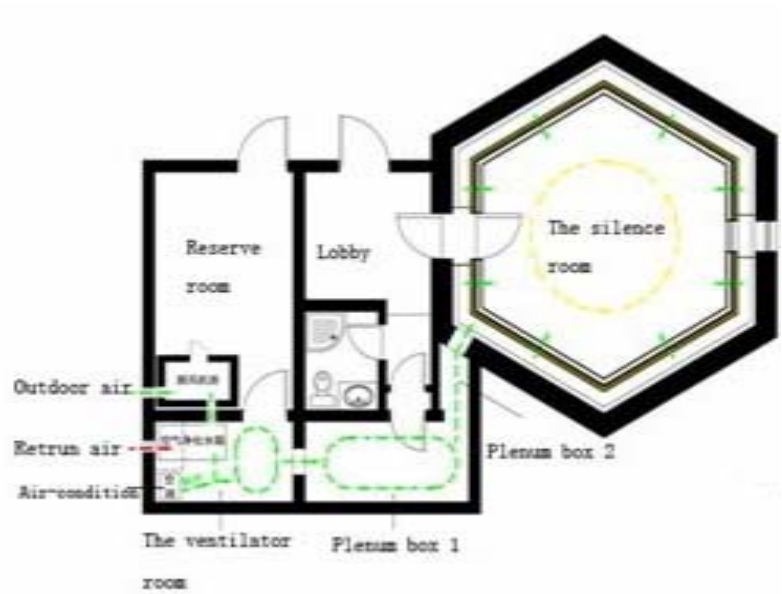

Fig.6 The Plan of the Ultra-quiet living environment lab

Based on the above design, the background noise of the inner building was very low and it could be 6.8 dB(A) by the measurement.It is shown in Fig.7.

Unit: dB

Frequency/Hz	63	125	250	500	1k	2k	4k	A
Measuring point	16.80	4.30	-4.60	-10.10	-8.50	-6.80	-5.50	6.8

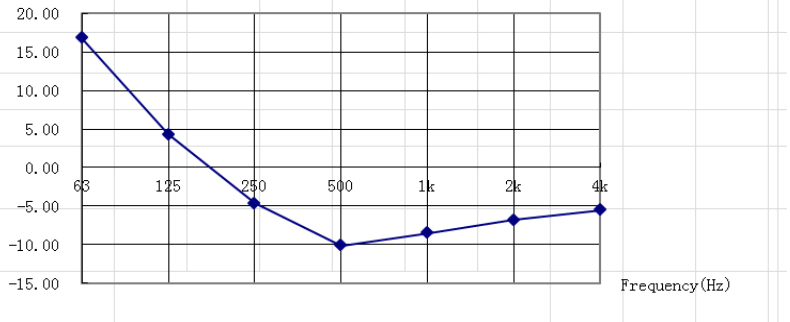

Fig.7 The datum and curve of the background noise for the Ultra-quiet Lab

2.2 Ventilation and noise control design

Ventilation is an essential safeguard for living space but it would lead the noise to the building. So the ventilation and the noise control design for the ventilation is one of the most important for the ultra-quiet living environment lab. The ventilation and noise control design was shown in Figs.8. The plenum chamber with sound absorption and the silencer were complexly utilized to reduce the airflow velocity and control the noise. With the above design, the noise in the building could be controlled at a very low level. And the background noise in the building could be reduced to 8.5 dB(A) with the ventilation by real testing.

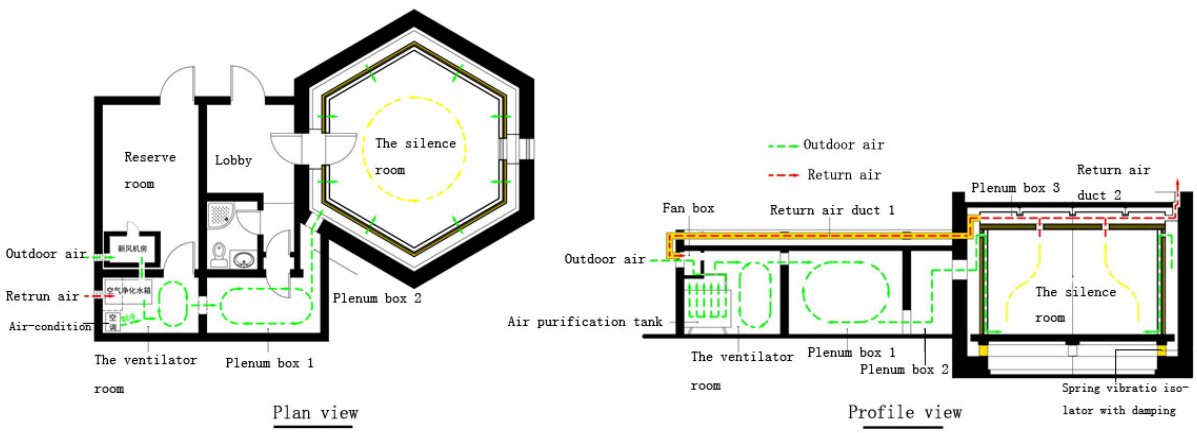

Fig.8 The section of the ultra-quiet living environment lab

To purify and improve the air quality, we designed a water purification device before the new air into the room.

2.3 Room acoustics and interior decoration design

The original lab was hexagonal and it would lead to the acoustic defects with the “sound focusing” effect. So the “sound pain” was designed for the wall and ceiling to break the “sound focusing”. The “sound pain ” is melamine foam sound absorbing material which could be pained by thermal transfer technology, and so it could obtain a good aesthetic properties for interior design. A copy of the ancient pain of China naming Fuchun Mountains painting was pained for the wall with “sound pain” to create an elegant and comfortable living environment for the lab. The interior of the lab were showed in Figs.9.. The reverberation time of 500Hz is 0.28s with a very good speech intelligibility for the design。

Fig.9 The Interior of the Ultra-quiet living environment lab

2.4 The design for living and office

To create a good living and working environment, we set up office chairs, sofas, beds and a senior spring massage bed in the laboratory to meet the requirements of simple living life. The laboratory is also equipped with ultra-low noise computer with Internet capabilities to meet the needs of the office and simple experiments.

3. Experimental studies and technical prospects

Through all these buildings, acoustics, aesthetics, integrated design, we created an ultra-low background noise with comfortable and elegant Habitat experimental platform environment.

Fig.10 The Brain health test in the lab

The ultra-quiet living environment lab can provide a good platform for basic scientific research and applied research in medicine, psychology, human behavior, and so on. Now it is used for experimental studies of human health effects of quiet and achieved certain results in the "quiet for sleep effects" as well. [2] The brain mechanisms and experimental studies on human rehabilitation was also carried out in the ultra-quiet living environment laboratory, and has archived some preliminary research results, the experimental verification of the internationally renowned "Jindelake theory" and get some preliminary research results. [3]

The technology of the ultra-quiet living environment lab can also be used for the recording room, studio, home theater, a meditation room, health Research Laboratory, hearing restoration treatment rooms, hearing examination room, upscale healthy housing and so on.

References:

[1] Xiang Yan.(2008). Studies on rain noise from lightweight roofs [D]. Beijing： Tsinghua University,

[2] Hui Li, Jianghua Wang, Xiang Yan, Xuguang Wang. The research on Human Response of Staying in Extreme Silent Environment for Eight Hours. Proceedings of the 15th Asia Pacific Vibration Conference, , Jeju Island, KR.

[3] Hui Li, Xiang Yan, Wang Jianhua. Acoustic research on brain healthy speech vibration.Proceedings of the 15th Asia Pacific Vibration Conference, , Jeju Island, KR.